Schéma de la base de données castore_database

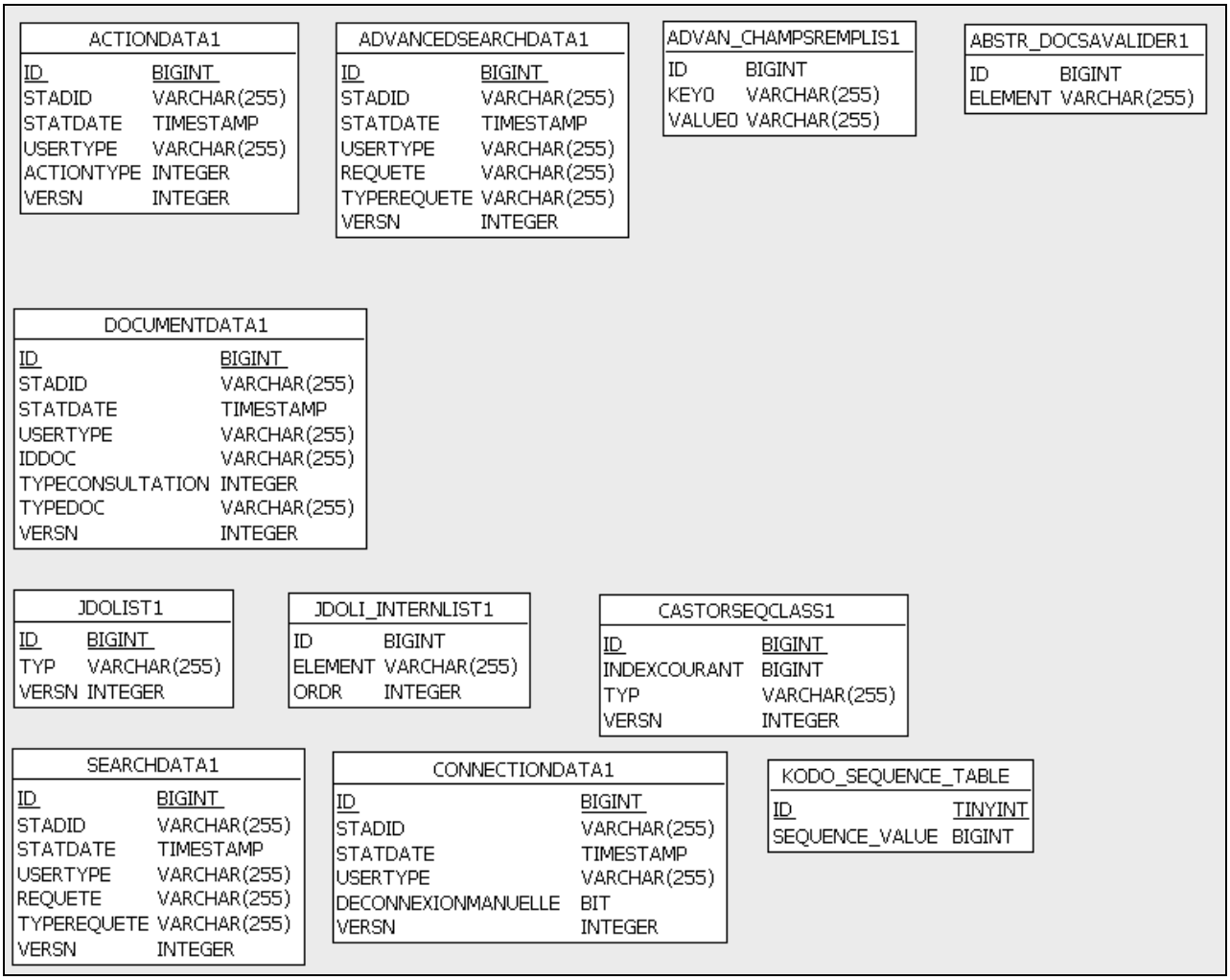

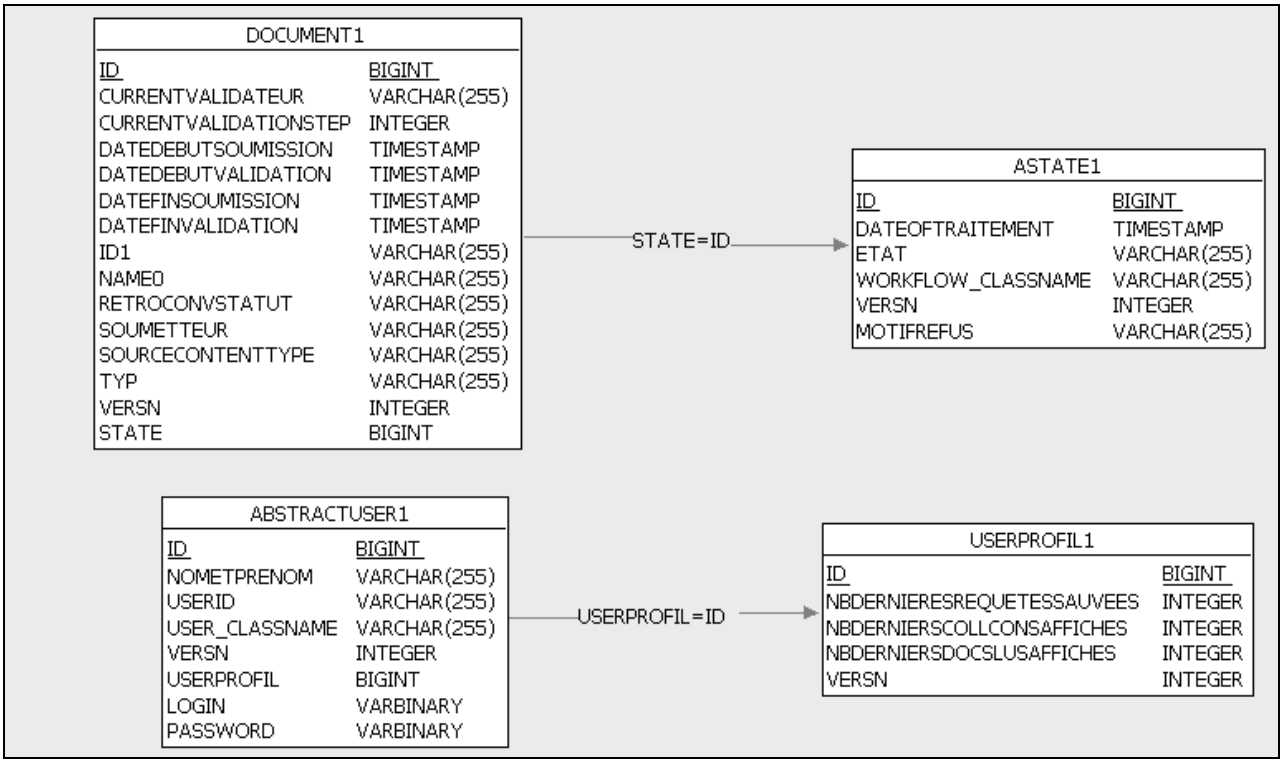

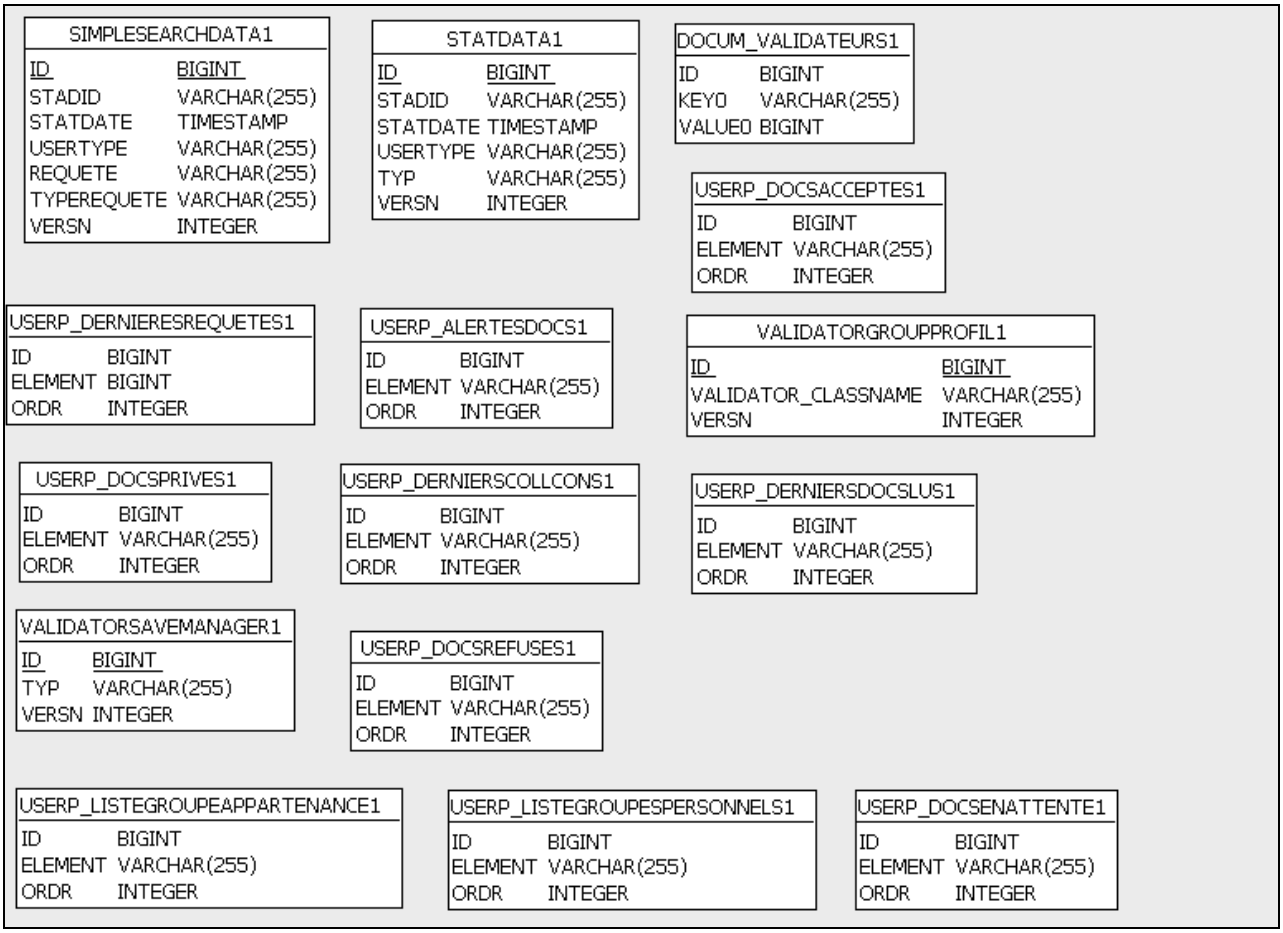
SIMPLESEARCHDATA1
ID BIGINT
STADID VARCHAR(255)
STATDATE TIMESTAMP
USERTYPE VARCHAR(255)
REQUETE VARCHAR(255)
TYPEREQUETE VARCHAR(255)
VERSN INTEGER
STATDATA1
ID BIGINT
STADID VARCHAR(255)
STATDATE TIMESTAMP
USERTYPE VARCHAR(255)
TYP VARCHAR(255)
VERSN INTEGER
DOCUM_VALIDATEURS1
ID BIGINT
KEY0 VARCHAR(255)
VALUE0 BIGINT
USERP_DOCSACCEPTES1
ID BIGINT
ELEMENT VARCHAR(255)
ORDR INTEGER
USERP_DERNIERESREQUETES1
ID BIGINT
ELEMENT BIGINT
ORDR INTEGER
USERP_ALERTESDOCS1
ID BIGINT
ELEMENT VARCHAR(255)
ORDR INTEGER
VALIDATORGROUPPROFIL1
ID BIGINT
VALIDATOR_CLASSNAME VARCHAR(255)
VERSN INTEGER
USERP_DOCSPRIVES1
ID BIGINT
ELEMENT VARCHAR(255)
ORDR INTEGER
USERP_DERNIERSCOLLCONS1
ID BIGINT
ELEMENT VARCHAR(255)
ORDR INTEGER
USERP_DERNIERSDOCSLUS1
ID BIGINT
ELEMENT VARCHAR(255)
ORDR INTEGER
VALIDATORSAVEMANAGER1
ID BIGINT
TYP VARCHAR(255)
VERSN INTEGER
USERP_DOCSREFUSES1
ID BIGINT
ELEMENT VARCHAR(255)
ORDR INTEGER
USERP_LISTEGROUPEAPPARTENANCE1
ID BIGINT
ELEMENT VARCHAR(255)
ORDR INTEGER
USERP_LISTEGROUPESPERSONNELS1
ID BIGINT
ELEMENT VARCHAR(255)
ORDR INTEGER
USERP_DOCSENATTENTE1
ID BIGINT
ELEMENT VARCHAR(255)
ORDR INTEGER

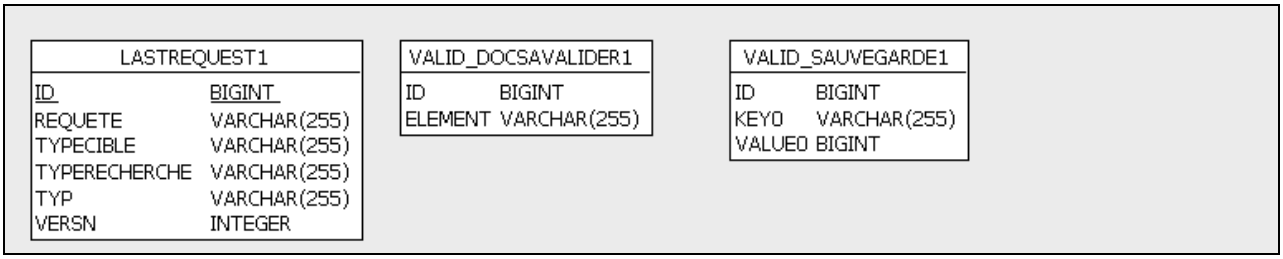
LASTREQUEST1
ID BIGINT
REQUETE VARCHAR(255)
TYPECIBLE VARCHAR(255)
TYPERECHERCHE VARCHAR(255)
TYP VARCHAR(255)
VERSN INTEGER
VALID_DOCSAVALIDER1
ID BIGINT
ELEMENT VARCHAR(255)
VALID_SAUVEGARDE1
ID BIGINT
KEY0 VARCHAR(255)
VALUE0 BIGINT

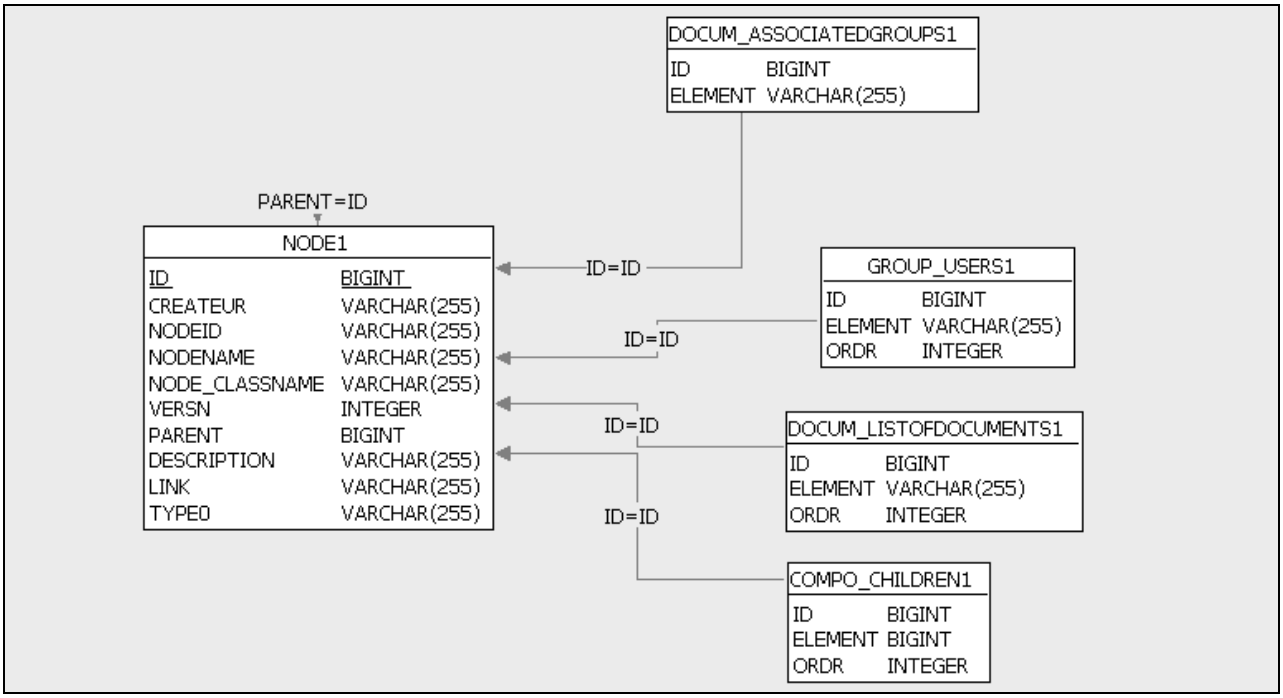
DOCUM_ASSOCIATEDGROUPS1
ID BIGINT
ELEMENT VARCHAR(255)
PARENT=ID
NODE1
ID BIGINT
CREATEUR VARCHAR(255)
NODEID VARCHAR(255)
NODENAME VARCHAR(255)
NODE_CLASSNAME VARCHAR(255)
VERSN INTEGER
PARENT BIGINT
DESCRIPTION VARCHAR(255)
LINK VARCHAR(255)
TYPE0 VARCHAR(255)
ID=ID
GROUP_USERS1
ID BIGINT
ELEMENT VARCHAR(255)
ORDR INTEGER
ID=ID
ID=ID
DOCUM_LISTOFDOCUMENTS1
ID BIGINT
ELEMENT VARCHAR(255)
ORDR INTEGER
ID=ID
COMPO_CHILDREN1
ID BIGINT
ELEMENT BIGINT
ORDR INTEGER